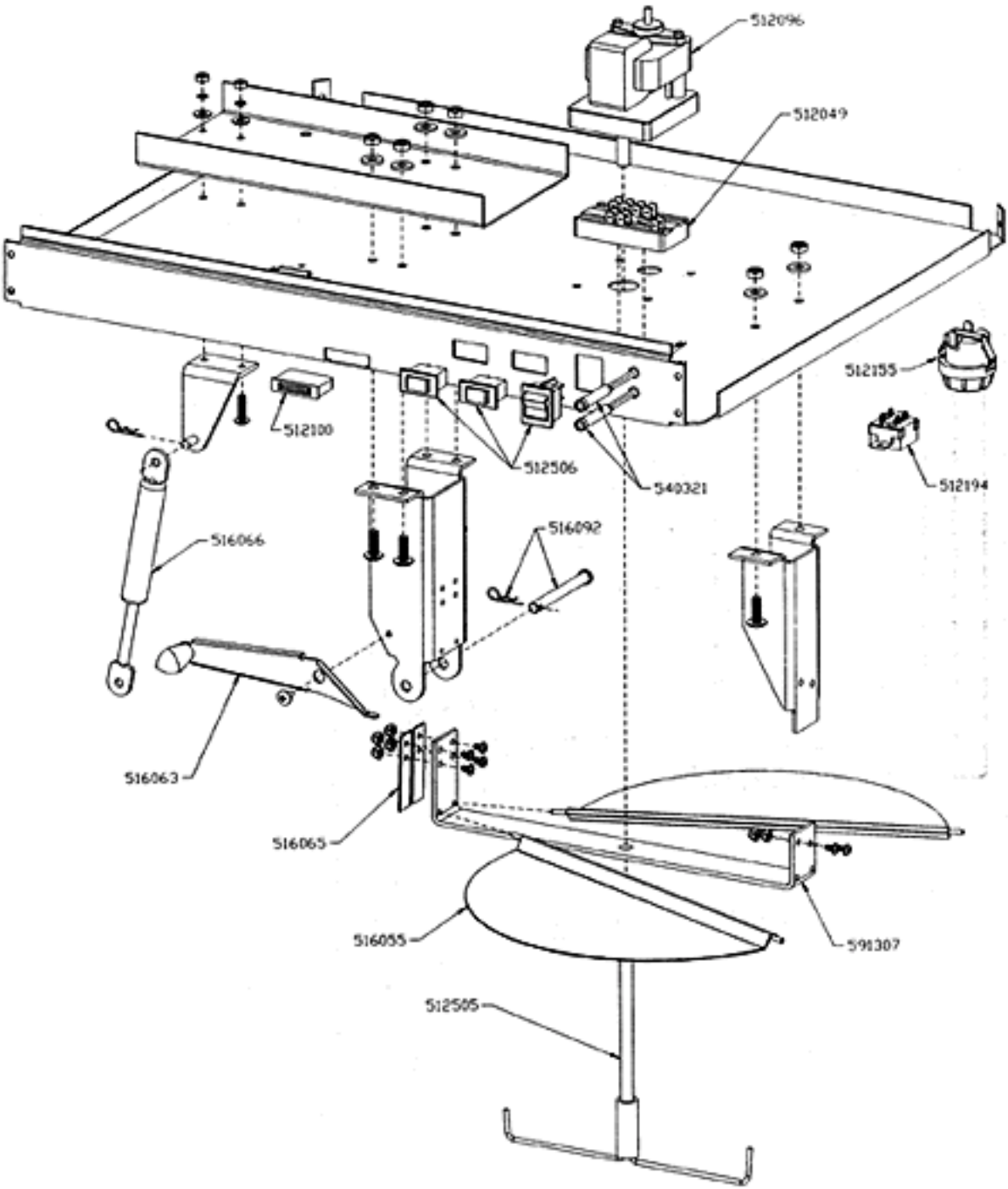TP-12 CHASSIS ASSEMBLY